missile radar

NUTTING ASSOCIATES

500 LOGUE AVENUE MOUNTAIN VIEW, CA. 94043 (415) 961-9373

TABLE OF CONTENTS

		Page
I	Introduction	1
II	Operator Instructions	2
	Figure A	3
	Figure B	3
III	Maintenance	9
	Trouble List	10
	AC Grounding	11
	Game Flow Chart	12
	Power Supply	13
	Coin Switch	13
	Service Notes	14
IV	Replacement Parts	15
	Figure 1	17
	Figure 1A	18
	Figure 1B	19
	Figure 2	21
	Figure 3	23
	Figure 4	25
	Figure 5	27

I INTRODUCTION

Missile Radar is a single player game. The player controls an ANTI-BALLISTIC MISSILE (ABM) that he uses to defend himself against an INTER-CONTINENTAL BALLISTIC MISSILE (ICBM).

GAME PLAY

The game is started by inserting the coin. ICBM's enter on trajectories from the left and right sides. The ICBM makes a score if it hits ground level, the player uses his ABM to try to intercept and destroy the ICBM in the air. The ICBM's approach is displayed as an arcing trace on the MISSILE RADAR screen with the accompaning whine of the missile. The player positions his ABM with the Missile Position control and depresses the Missile Fire Button, the ABM streaks upward toward its target with the accompaning rocket thrust sound. The ABM's will fire continuously until the ABM intercepts the ICBM or the ICBM hits the ground. An explosion signals an interception or an ICBM ground hit and the screen will go white and an explosion sound is heard.

SCORING

ICBM score is kept by the digital display on the lower left and the ABM or player, score is kept by the digital display on the lower right. Play interval of 00-99 is given by the digital display in the center. Playtime interval is 2 1/2 minutes.

FREE GAME

A free game is given with an ICBM score of three or less. Game price is fixed at 25¢. An optional coin counter is available for easy installation in the field if not factory equipped.

SPEED/SKILL

The speed of the incoming ICBM (which determines skill required to win) is controlled by a 2 position switch. Refer to Operator Instructions.

MANUAL EXTRA COPIES

This manual has been printed on oil resistant stock to prolong its life. Extra copies of this manual may be ordered. There is also an instruction sheet for unpacking as well as one for packing. These instructions should be followed to assure proper protection of the game. Distributors may find it advantageous to save the packing carton and inserts for use in subsequent shipments of the game.

II OPERATOR INSTRUCTIONS

INSTALLATION

Installation of the MISSILE RADAR game is simple and straight forward. Locate the game and adjust four leveling feet, use a 3/8" open end wrench. Plug AC into a grounded socket (see Maintenance Instructions for procedure to ground ungrounded outlets). The power cord is six feet long as measured from the point where it emerges from the Cabinet. Excess length may be stored inside the Cabinet by merely pushing it back in. To insure proper operation it is advised that the operator read the rest of this section of the manual to familiarize himself with the game and then go through the CHECK OUT PROCEDURE outlined in III Maintenance.

COIN DOOR

There are different locks on the Coin Door and the Service Access Opening. Each of these two locks is provided with two Keys. The Coin Door Lock provides game security (tripping the Coin Switch by hand enables Game Start). The Lock in the center of the Base Cabinet just under the Control Panel secures the Top Cover.

TOP COVER —OPEN

Turn the Top Cover Lock clockwise to unlock the Top. Raise the cover fully and while holding the cover with the right hand position the support rod with the left hand. Slowly lower the cover and position the support rod into the bracket on the Top Cover. (Detail 1, FIGURE A)

TOP COVER — CLOSE

The Top Cover is closed by just raising it until the support rod is free of bracket on the Top Cover, then carefully lower the Top Cover until it comes to rest against the Base Cabinet. DO NOT PUT YOUR FINGERS UNDER THE CONTROL PANEL--KEEP YOUR HANDS UNDER THE SIDES OF THE TOP COVER. Note that the Locking Slide must be fully to the Right in order for the Top Cover to close.

With the Top Cover open (and latched) swing the control panel toward you and downward till it comes to rest. Now you hand access to the Electronic Chassis, Fuse, Power Supply, TV Controls, ICBM Speed Switch and the Test Pattern Switch. (FIGURE B)

ELECTRONIC CHASSIS

Electronic Chassis:

This module consists of four game control boards, a Mother Board (Circuit Board #5) and the Chassis. A good Ground Connection (via the Green Wire) is essential. BE SURE TO TURN OFF THE POWER BEFORE DISCONNECTING THE CONNECTOR, THE BOARDS OR THE CHASSIS (Ground) ITSELF.

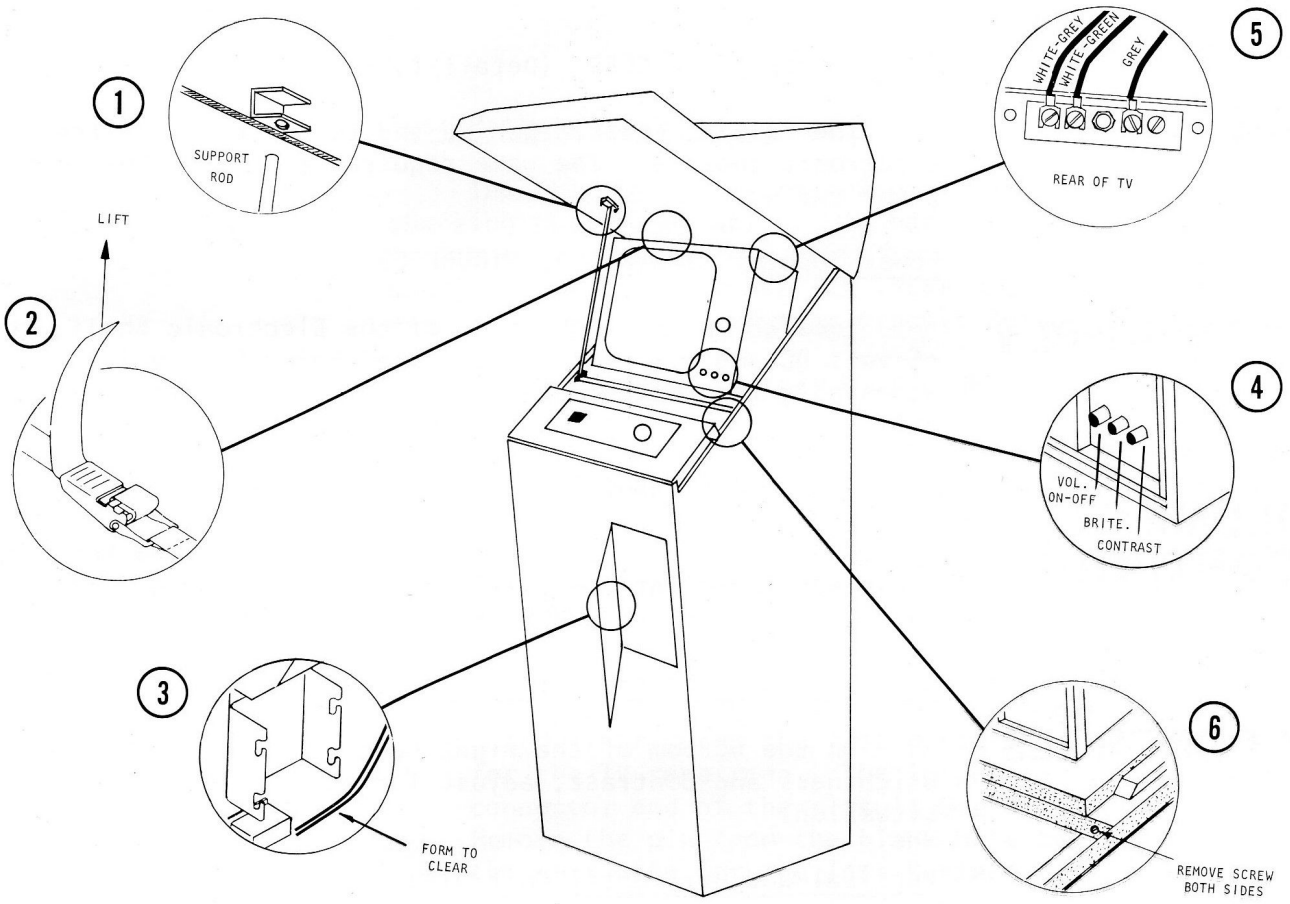

FIGURE A

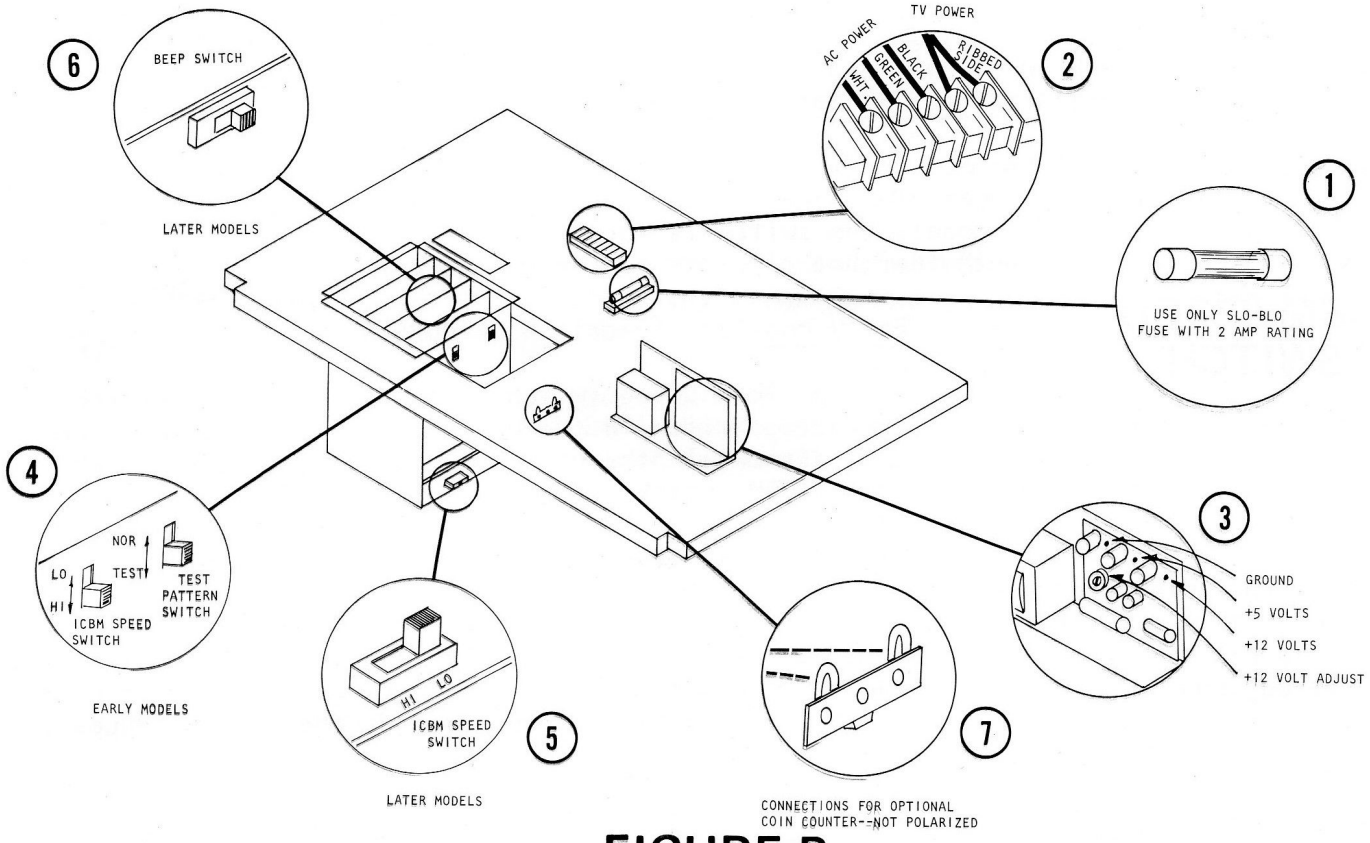

FIGURE B

FUSE

Fuse: PULL POWER CORD (Detail 1, FIGURE B)

The fuse is located behind and to the right of the electronic chassis. The game requires a SLO-BLO fuse with 2-AMP rating.

POWER SUPPLY

Power Supply: (Detail 3, FIGURE B)

Located on the right side of the Electronic Shelf, the +5-volt DC and ±12 volt DC regulated Power Supply is accessable for voltage checks (5V ± 0.25V) at every service call.

VOLUME CONTROL

Volume Control: (Detail 4, FIGURE A)

The ON/OFF Volume Control Knob located on the bottom right hand panel of the TV will adjust the loudness of the game sounds. THE KNOB MUST BE TURNED ON.

TV CONTROLS

Brightness and Contrast Controls: (Detail 4, FIGURE A)

On the bottom of the right hand panel on the TV are Brightness and Contrast, adjust for particular lighting situation.

Vertical and Horizontal Controls:

On the rear of the TV are the Vertical and Horizontal Controls, these should be adjusted approximately halfway between the two points where picture stability is lost.

ICBM SPEED SWITCH

The ICBM Speed Switch:

On earlier models the ICBM Speed Switch is located on the right hand side of the electronic chassis. On later models the switch is located on the Bottom Circuit Board (Mother Board) close to the connector.

Early Models: (Detail 4, FIGURE B)

The ICBM Speed Switch is toward the front of the cabinet. Switch in the up position produces low speed ICBM attack, in the down position it produces a high speed ICBM attack.

Later Models: (Detail 5, FIGURE B)

The ICBM Speed Switch is located on the Bottom Printed Circuit Card toward the bottom of the electronic chassis. Switch towards the front of the cabinet produces a high speed attack, towards the rear produces a low speed attack.

TV TEST PATTERN

Test Pattern Function:

The Test Pattern Function provides a convenient way of checking out TV operation. In earlier models a Test Pattern switch is located on the right hand side of the electronic chassis towards the rear. On later models the switch has been replaced by a jumper on Circuit Board #3.

Early Models: (Detail 4, FIGURE B)

The switch is located on the rear of the right hand side of the electronic chassis. With the switch in the up position the TV is connected in a normal game mode. With the switch in the down position the Test Pattern is generated for use by the TV service man.

Later Models:

A connecting jumper on Circuit Board #5 (Mother Board) introduces the test pattern on the TV screen for the TV repairman. The jumper is located on the connector end of the circuit board towards the rear. Remove the pin from the blank hole and insert it into the next hole for the Test Pattern.

BEEP SWITCH

Beep Switch: (Detail 6, FIGURE B)

Incorporated in later Models only. Switch is located near the top of Circuit Board #3. The Beep Switch controls the audible beep used in the Standby-Attract Mode.

COIN ACCEPTOR SERVICE

The Coin Acceptor may be removed for periodic cleaning as follows: (Detail 3, FIGURE A for detail)

1. Open the Coin Door with the Key provided.
2. Form the wires downward and toward the hinges of the door.
3. Pull and Lift the Locking Tab located at the upper guide pin of the Acceptor Mechanism.
4. Lift the Acceptor Mechanism, pull outward on its lower end until it clears the channel.
5. Pull outward on the upper end of the Coin Acceptor to clear the channel.

Clean the Coin Acceptor by immersing it in a mild detergent solution such as AQUA-SOL, then scrub it with a small brush (1/4" sashbrush). Rinse thoroughly and dry it as quickly as possible. A hair dryer does a good job of drying.

Replace the Coin Acceptor as follows:

1. Form the wires downward and toward the hinge.
2. Tilt the Coin Acceptor slightly so that the top of it will enter the channel first and insert it into the channel so that the upper Guide Pins are BELOW their slots in the channel.
3. Align the Coin Return Level on the Coin Acceptor with the Level on the Channel assembly, then push the Acceptor upward until the upper Guide pins enter their slots.
4. Push the bottom of the Acceptor inward so that the Lower Guide pins enter their slots.
5. Let the Acceptor slide downward until the Guide Pins bottom in the slots.
6. Place the Locking Tab into the slot for the upper Guide Pin so that it is above the Pin.
7. Close the Coin Door.

OPTIONAL COIN COUNTER

Optional Coin Counter:

The Optional Coin Counter may be added to the game at anytime by the operator. Installation requires the connection of the two Coin Counter wires to the terminal strip, polarity is not important. (Detail 7, FIGURE B)
The Counter is usually mounted in the Coin Compartment on the wooden panel. Mount the Counter with two screws so that it will not interfere with the Coin Acceptor on the Coin Door.

CLEANING

The glass panel on the Top Cover may be cleaned with the same solution used for the Coin Acceptor. Use a dampened cloth or sponge. PREVENT DRIPPING ONTO THE ELECTRONIC SHELF AND CONTROL PANEL. Rinse and dry using a soft clean cloth. The TV screen may be cleaned in the same manner as the glass panel.

REMOVING TV

Removal of the TV is accomplished as follows:

1. Open and Latch the Top Cover.
2. Open out the Control Panel by:
   a. Lifting rear edge of Panel and rotating it over the front of the Base Cabinet.
   b. Letting it come to rest outside the Cabinet, against the front.
3. Disconnect the TV-AC cord from the terminal block on the shelf. (Detail 2, FIGURE B)
   WARNING: WHEN RECONNECTING THE TV-AC CORD TO THE TERMINAL BLOCK MAKE SURE THAT THE RIBBED SIDE OF THE CORD IS CONNECTED TO THE CORRECT TERMINAL (AC-NEUTRAL, WHITE).

4. Disconnect the TV Signal wires at the antenna terminals of the TV. (Detail 5, FIGURE A)
5. Remove the holding screws from the TV Shelf. (Detail 6, FIGURE A)
6. Slide the TV Shelf (with TV still strapped to it) out of the guides on the sides of the Base Cabinet. CAUTION--IT IS HEAVY (40 pounds).
7. Set the TV and Shelf onto a level surface and pull the end of the strap out from under the right end of the Buckle.
8. Pull straight up on the end of the strap until the Buckle unlatches. (Detail 2, FIGURE A)
9. Rotate the Buckle to the right then pull it to the right while pushing the end of the strap into the Buckle. IT IS NECESSARY TO DISCONNECT THE STRAP FROM THE BUCKLE. (Refer to Detail 2, FIGURE A for rethreading strap.)

SPARE PARTS

It is recommended that sufficient spare modules be kept available either through your Distributor or in your own stock. Nutting Associates will normally be able to return repaired modules the next day after they are received at the Mountain View plant. Please mark the shipping label "Repair and Return" and enclose a list of all modules shipped. It is also very helpful to have a description of the malfunction symptoms attached to each module, preferably with a tag tied on with string. Your cooperation in these matters is appreciated and helps us to serve you better.

Things to Remember:

1. ALWAYS have Power OFF when removing or replacing modules.

2. DON'T overlook the POWER SUPPLY as a possible source of trouble. CHECK it every time.

3. RECHECK a found bad module to assure that it wasn't just a connector problem.

III MAINTENANCE

These instructions are designed for use by the technically oriented repairman. Routine adjustments and cleaning are explained in the OPERATOR INSTRUCTIONS which is a separate set.

The GAME FLOW CHART and the CHECKOUT PROCEDURE will provide the Repair Technician with sufficient information to maintain the game in top operating condition. The individual Repair Technician is encouraged to add meaningful notations as needed.

CHECKOUT PROCEDURE

(see Location Diagram and Trouble List)

1. BEFORE connecting to AC power INSPECT:
   a. Harness and Connectors for OPENS or SHORTS.
   b. Electronics Chassis and Boards for Foreign matter.

2. Assure that all Connectors and Boards are properly connected, then plug in the AC cord and turn ON the TV Switch.

3. When power comes on check the following:
   a. Power Supply for 5 volts ± 0.2 at (2) and + 12.6 volts ± .5 volts and -12.6 volts ± .5 volts.
   b. Legitimate NUMBERS appear for Scores (no missing or extra segments).
   c. Missiles are in motion from left to right and right to left in an attract mode.

4. Operate the coin switch downward <u>once</u> and <u>hold</u> it while observing:
   a. Scores both reset to "0".
   b. (Applies to Optional Coin Counter) Coin Counter steps 1/2 digit as switch is depressed.

5. Release the coin switch and observe:
   a. The ICBM's start coming over with sound effects.
   b. ABM movement is controlled by MISSILE POSITION control.

6. In play the ICBM's will attack from left and right on several different paths. Only one ICBM will attack at a time.

7. When ICBM hits ground:
   a. Screen flashes.
   b. Explosion is heard.
   c. Left counter advances by one.

TROUBLE LIST (keyed to Checkout Produre)

TEST	PROBABLE CAUSES BOARD #					OTHER
1a						Tywraps, solder, debris
1b						Environs, repairs, etc.
2						Handling
3a						Age, Resist-Short, Load
3b	1					Connections
3c		2	3			
4a	1		3			Coin Switch
4b			3			Counter, Connectors
5a		2		4		
5b		2				Missile Position Control
6		2				
7a			3			
7b				4		
7c	1		3			
8a			3			
8b				4		
8c	1		3			
9a	1		3			
9b	1		3			

8. When ABM hits ICBM:
   a. Screen flashes
   b. Explosion is heard.
   c. Right counter advances by one.

9. Game ending:
   a. The game ends when the Play Interval Counter reaches 99 and the ICBM score is 4 or more.
   b. The game continues automatically if the ICBM score is 3 or less. The Play Interval Counter will reset to zero and the game will start again.

GROUNDING AN UNGROUNDED OUTLET

Providing Ground at Undergrounded Outlets:

1. Measure 117 VAC across the outlet.

2. Measure each side of the outlet to
   a. Cover or cover screw
   b. Cold water pipe or Ground Stake

3. Connect Adapter grounding wire to most convenient point (2a or 2b above) that measures zero volts AC to one side of the outlet.

4. Plug the Adapter in so that the side measuring zero volts AC goes to the Left side of the Adapter (Note: The Adapter may have to be plugged in upside-down). If polarized two contact sockets are used, the larger contact should be AC Neutral and the smaller contact should be AC "Hot".

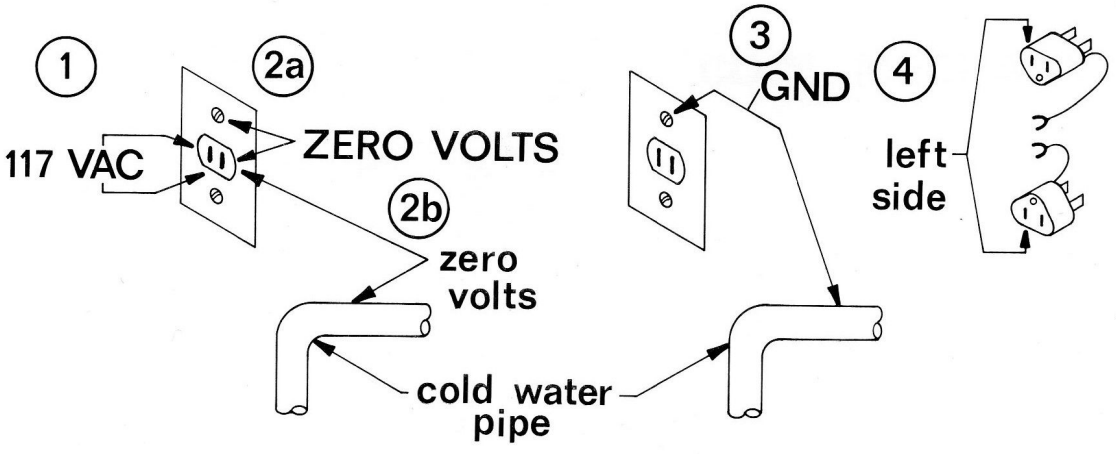

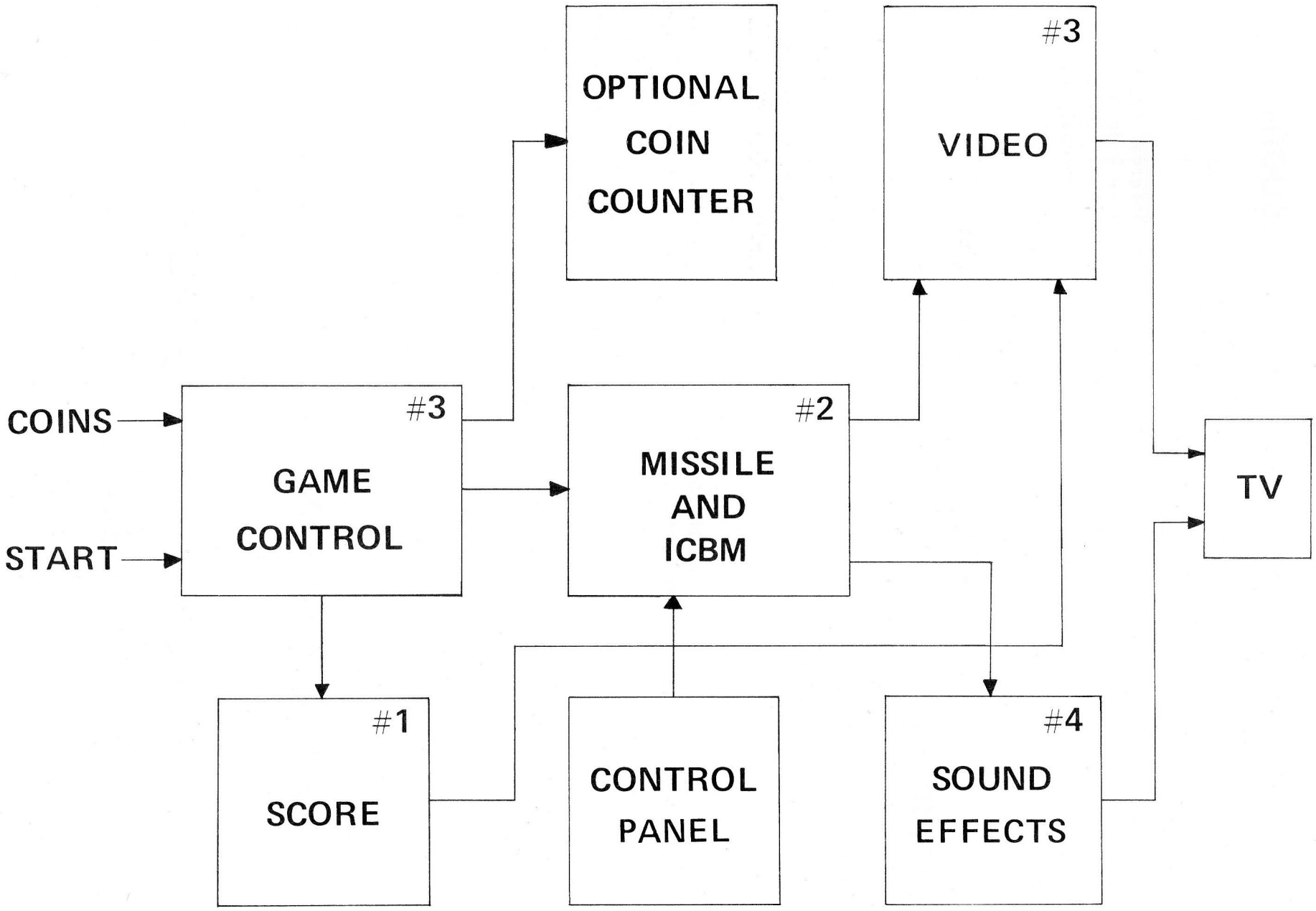

GAME FLOW CHART

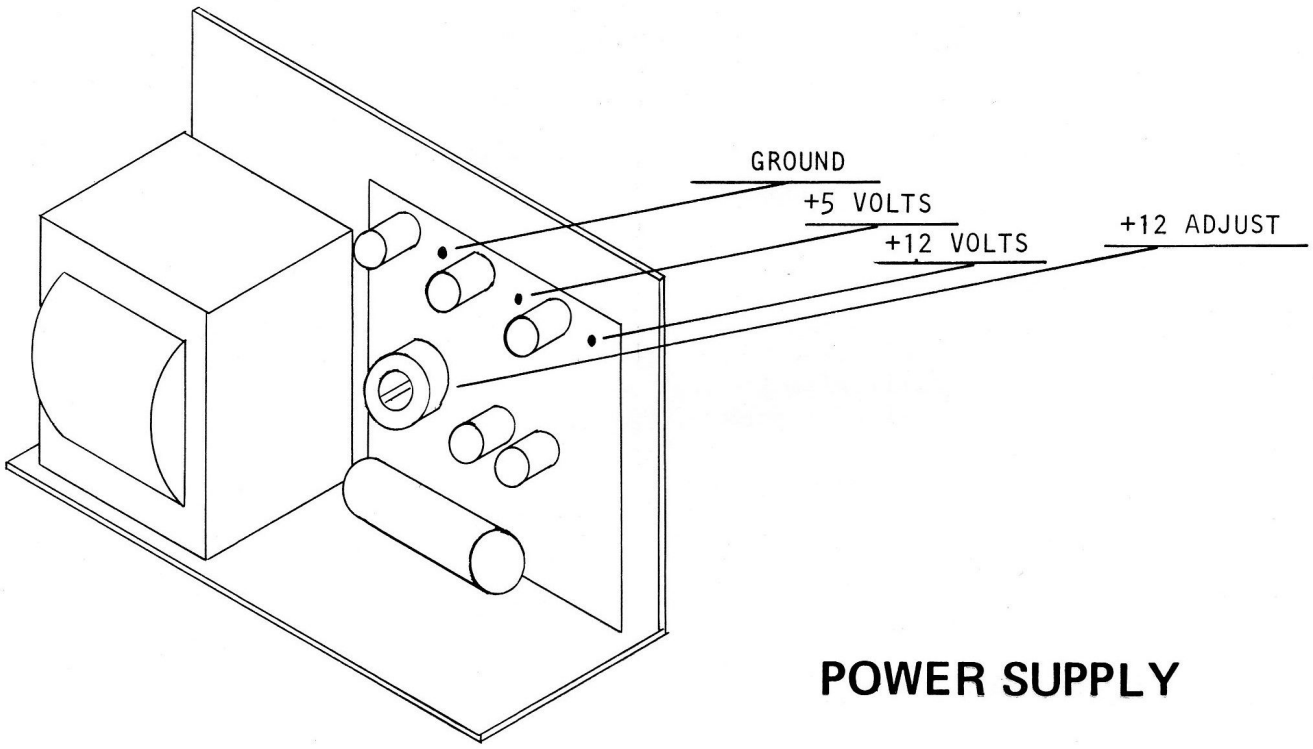

POWER SUPPLY

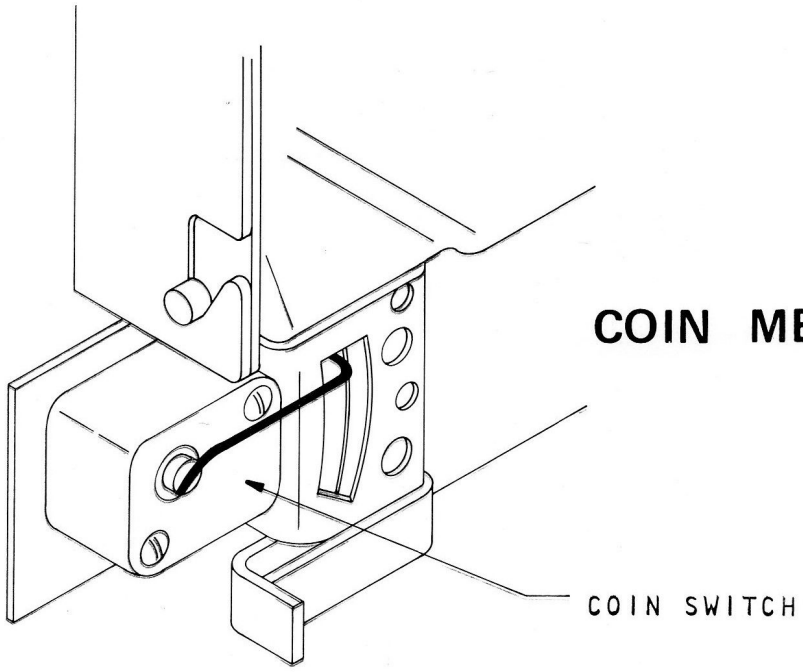

COIN MECHANISM

SERVICE NOTES

IV REPLACEMENT PARTS

The following nine illustrations and their accompanying lists cover all the REPLACEMENT PARTS that are stocked by NUTTING ASSOCIATES.

There are five main illustrations and two subsidiary ones. The main illustrations are designated by a number only (such as "Fig. 1"). Subsidiary illustrations carry the number of the related main illustration PLUS a letter (such as "Fig. 1A"). Here is a list of all the illustrations.

Fig. 1	Base Cabinet (& coin box)
1A	Locking Slide DETAIL
1B	Coin Door DETAIL
2	Control Panel
3	Electronics Shelf
4	TV Shelf
5	Cabinet Top

There are five listings of REPLACEMENT PARTS, one for each main illustration number. When ordering parts make reference to the NAME and the PART NUMBER listed. Be sure to specify the quantity desired.

SCREWS, NUTS, ETC.

Common "Hardware" items such as screws, nuts, washers, etc. ARE NOT LISTED and will not normally be supplied by NUTTING ASSOCIATES. These items should be replaced via your local Hardware supply.

FIGURES 1, 1A AND 1B

ITEM	DESCRIPTION	PART NUMBER
1.	Top Cabinet Support	300-0088
2.	Base Cabinet ASSEMBLY	400-0005-04
3.	Locking Slide ASSEMBLY	REF. ONLY
	a. Locking SLIDE (left end shown)	110-0008
	b. Mounting SCREW	411-2120-24
	c. WASHER	431-1265-62
	d. SPACER	
	e. Nylon SPACER	437-9257
	f. WASHER	431-1265-62
	g. LOCKWASHER	431-2256-38
	h. NUT	421-0120
4.	LOCK and CAM ASSEMBLY	REF. ONLY
	a. Standard LOCK, CAM & KEY	580-2078-02
	b. Locking Slide CAM	300-0049
	c. Cam SPACER	437-9194
5.	Leveling FOOT	501-0316-29
6.	Coin Door ASSEMBLY	109-0004
	a. Coin Door FRAME	300-0006
	b. Coin Door Sub-assembly	400-0007
	c. 1. Coin Return ROD	300-0054
	2. Coin Return RETAINER	631-1225-29
	3. Coin Return STOP Retainer	631-3207-29
	d. Door LOCK, CAM, & KEY	580-2078-01
	e. Coin CATCH ROD (with NUTS)	461-0001-01
	f. Coin ACCEPTOR	Q530
	g. Coin SWITCH	201-0002
7.	COIN BOX	400-0002
8.	HINGE	400-0006
9.	CAUTION STICKER	120-0015

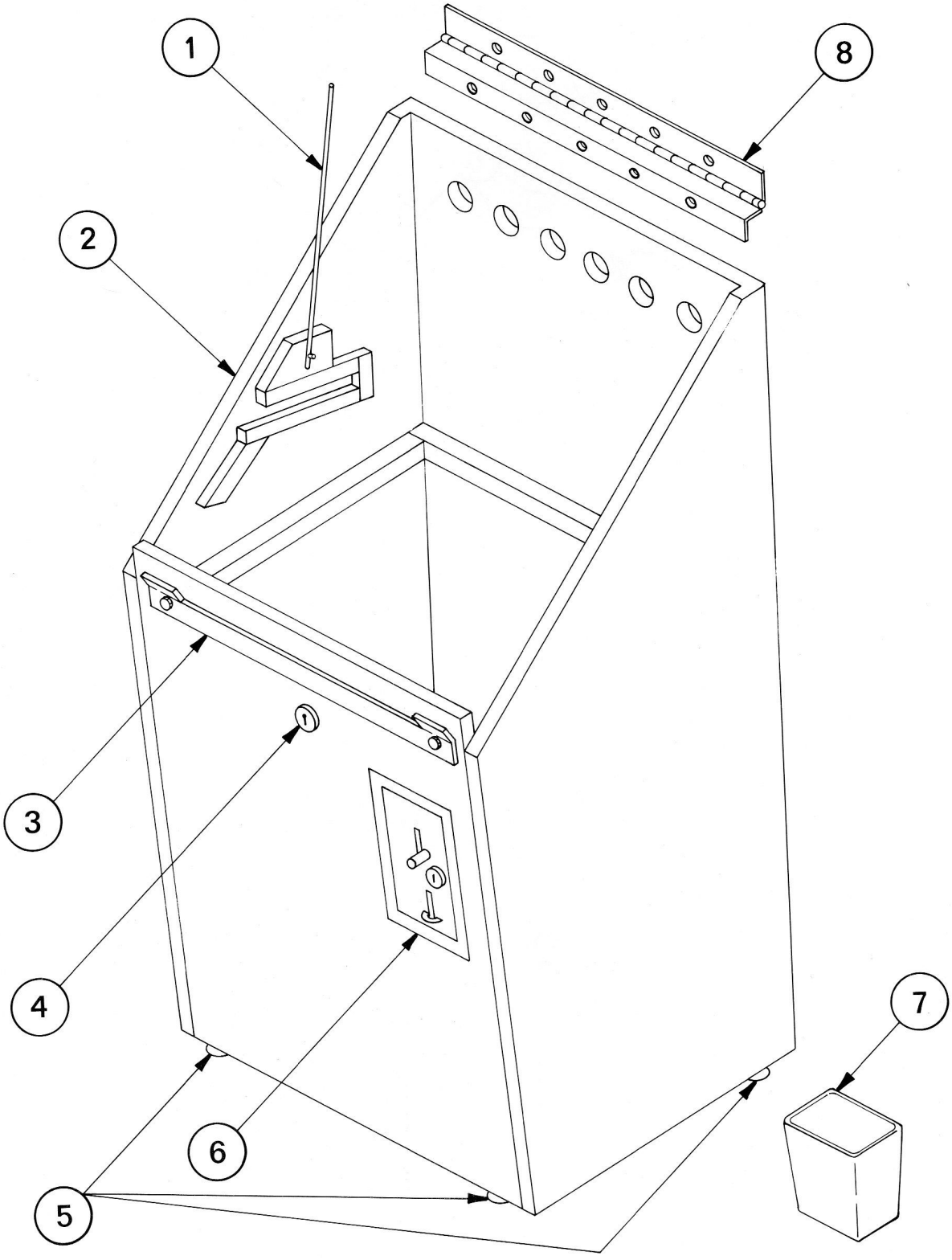

FIGURE 1

6 COIN ASSY.

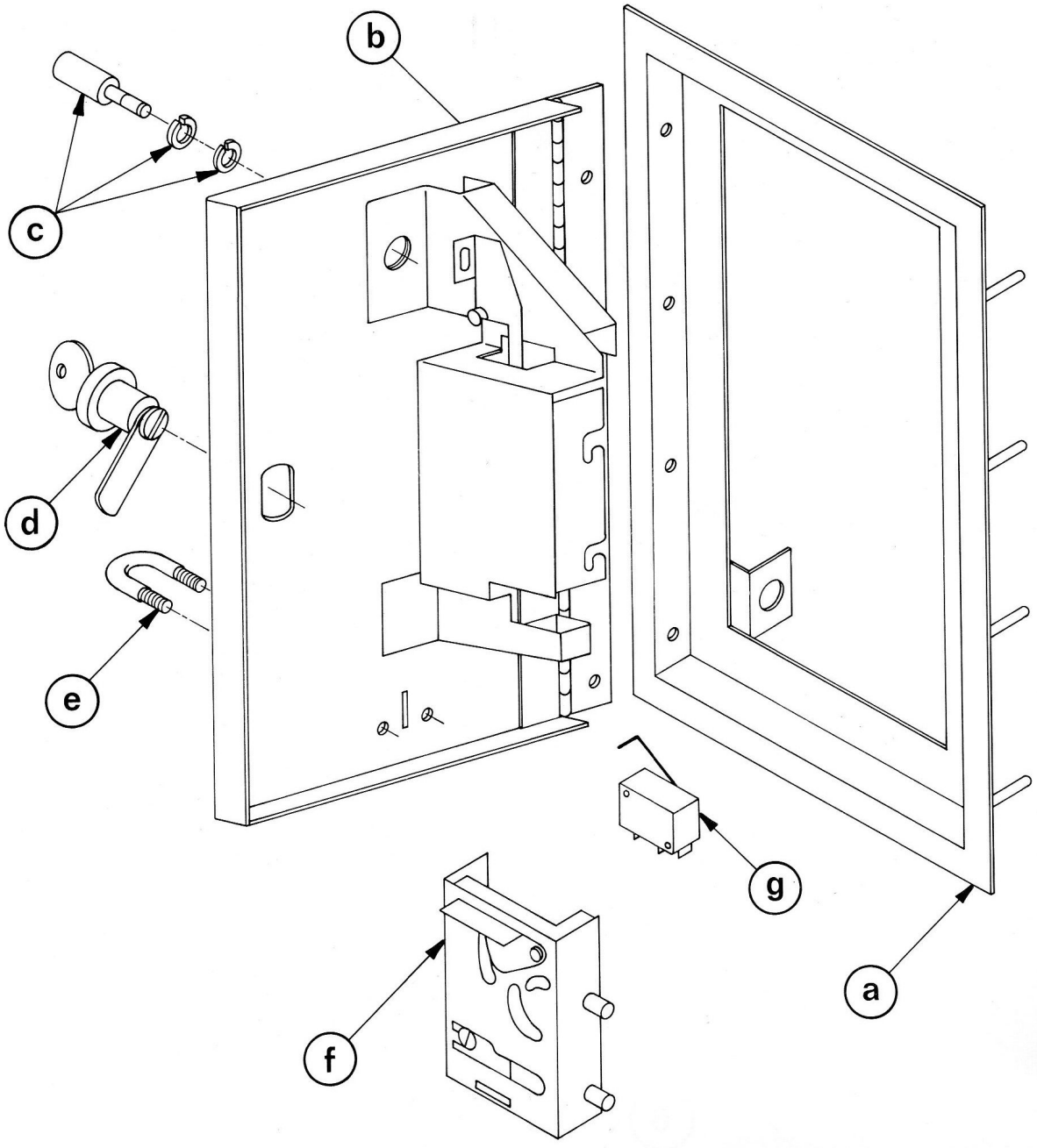

FIGURE 1A

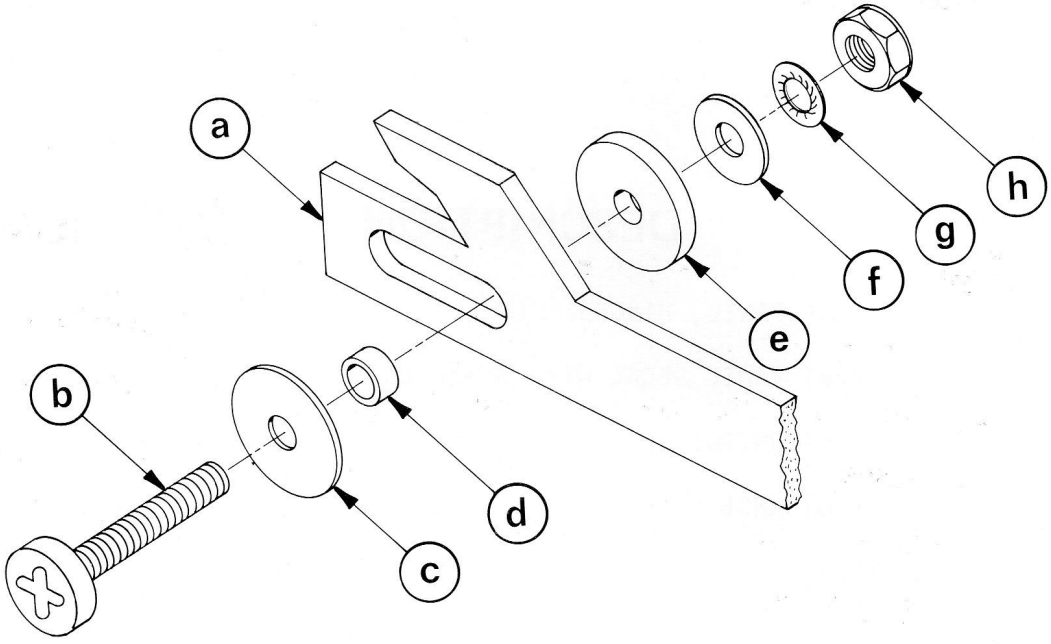

3 LOCKING SLIDE

4 LOCK, CAM & KEY

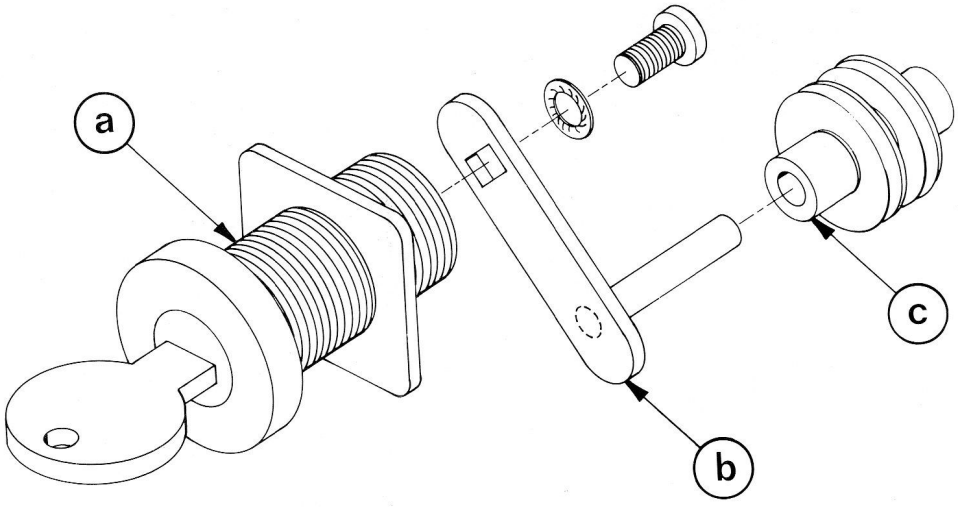

FIGURE 1B

FIGURE 2

ITEM	DESCRIPTION	PART NUMBER
1.	Control PANEL, HINGED	300-0074
2.	Control PANEL DECAL with Graphics	120-0004
3.	PUSHBUTTON Switch	201-0001-01
4.	Control KNOB	206-0001-01
5.	POTENTIOMETER	202-0006-01

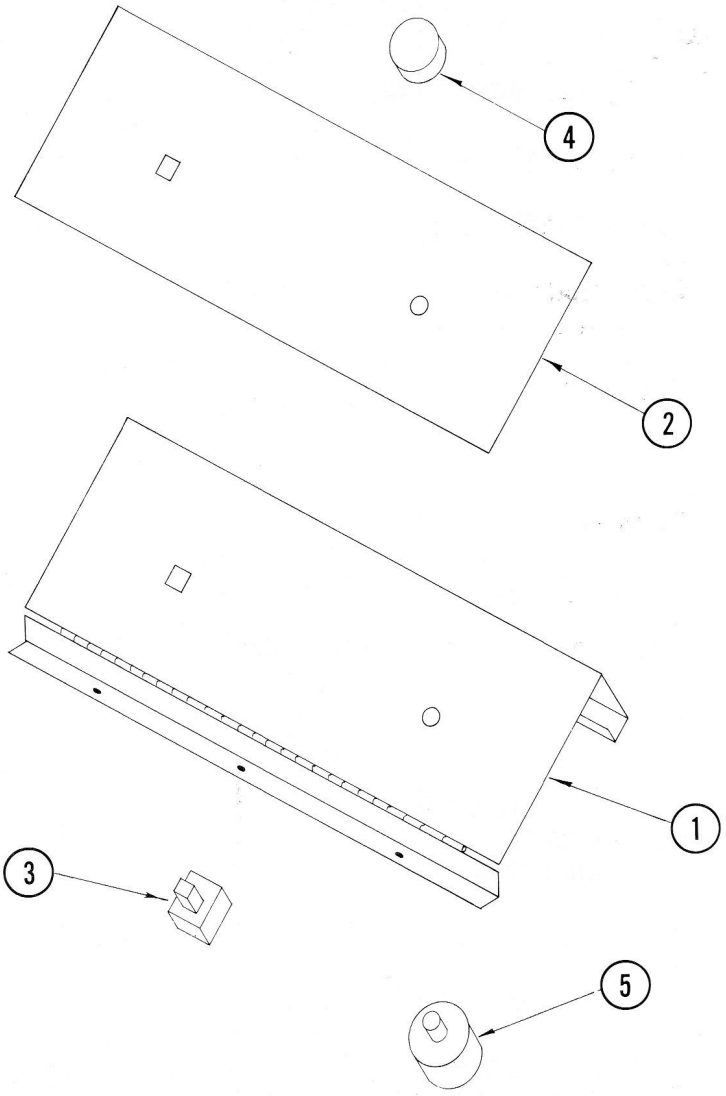

FIGURE 2

FIGURE 3

ITEM	DESCRIPTION	PART NUMBER
1.	Sync BOARD (#1)	104-0001*
2.	Character BOARD (#2)	104-0002*
3.	Video BOARD (#3)	104-0003*
4.	Audio BOARD (#4)	104-0004*
5.	Card CHASSIS	400-0001-01
	a. Card LOCK Bar	400-0004-01
6.	Mother BOARD	104-0005*
7.	Electronic SHELF	300-0002-01
8.	Terminal BLOCK (5 Position)	200-023-05
9.	FUSEHOLDER	200-0020-01
10.	COUNTER (Optional, NOT SHOWN)	200-0002
11.	POWER SUPPLY	200-0001-01
12.	DC HARNESS	105-0006
	a. CONNECTOR (Mother Board)	200-0026-21
	b. CONNECTOR (Control Panel Receptacle)	200-0027-02
	c. CONNECTOR (Control Panel Plug)	200-0027-12
13.	AC HARNESS (Not Shown)	105-0001-01
14.	INFORMATION LABEL	120-0019-01

*NOTE: WHEN ORDERING REPLACEMENT CIRCUIT BOARDS IT IS VERY IMPORTANT THAT THE REVISION LETTER PRINTED ON THE ASSEMBLY SIDE IS GIVEN.

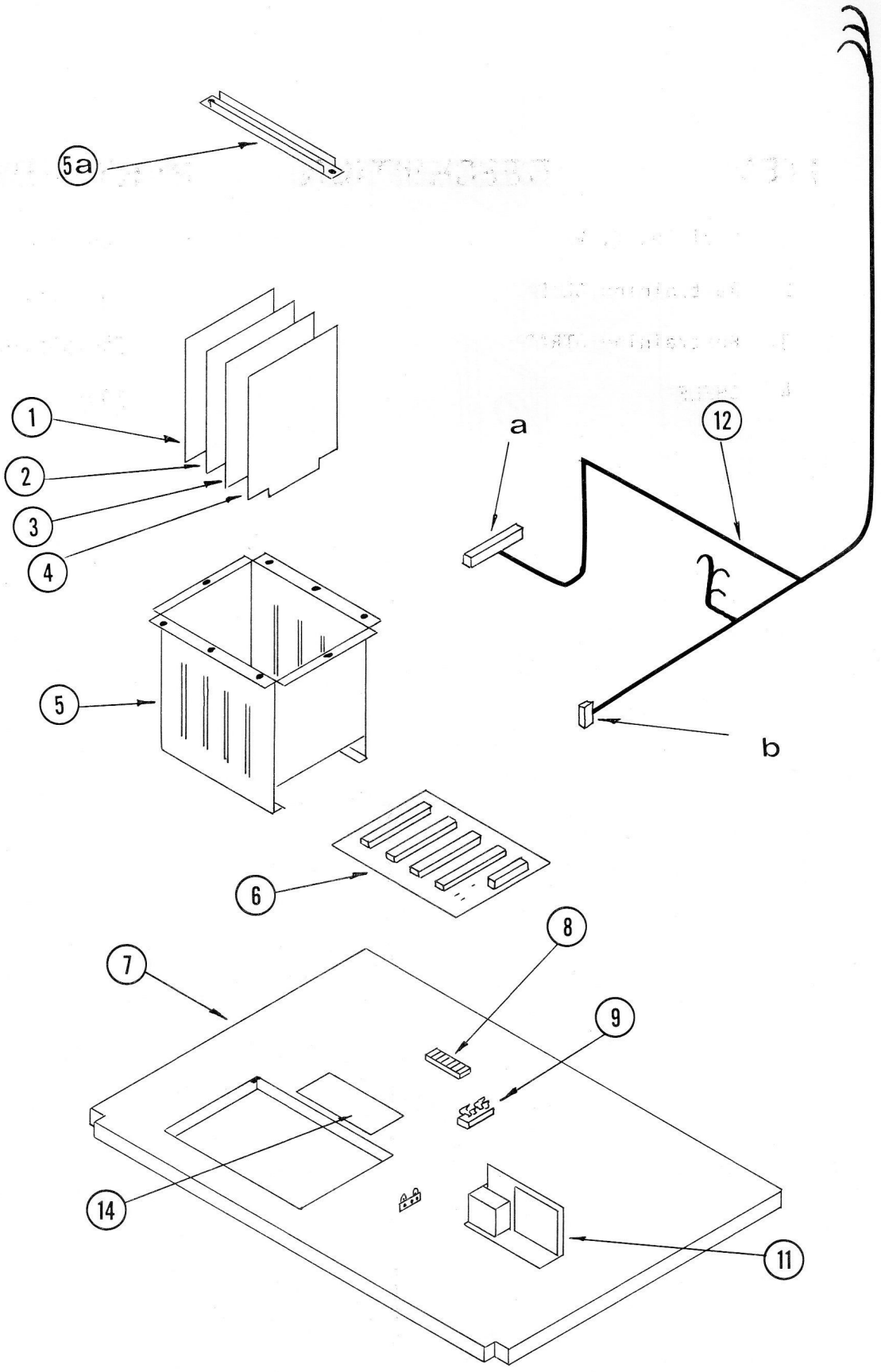

FIGURE 3

FIGURE 4

ITEM	DESCRIPTION	PART NUMBER
1.	Modified T. V.	109-0028-01
2.	Restraining CLIP	300-0050
3.	Restraining STRAP	540-5010-01
4.	SHELF	300-0019

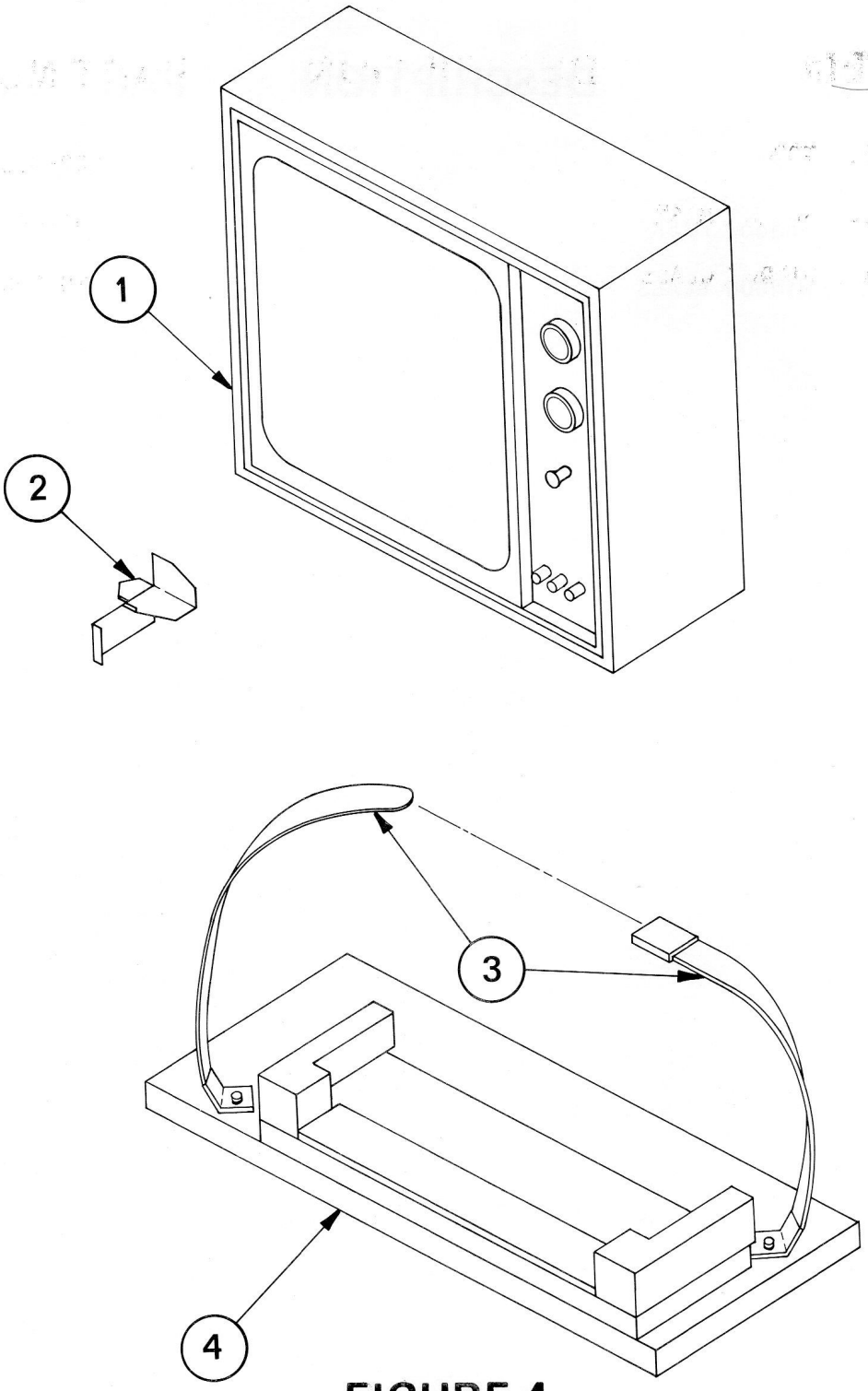

FIGURE 4

FIGURE 5

ITEM	DESCRIPTION	PART NUMBER
1.	TOP	400-0003
2.	Shadow MASK	109-0019
3.	WINDOW GLASS	120-0006

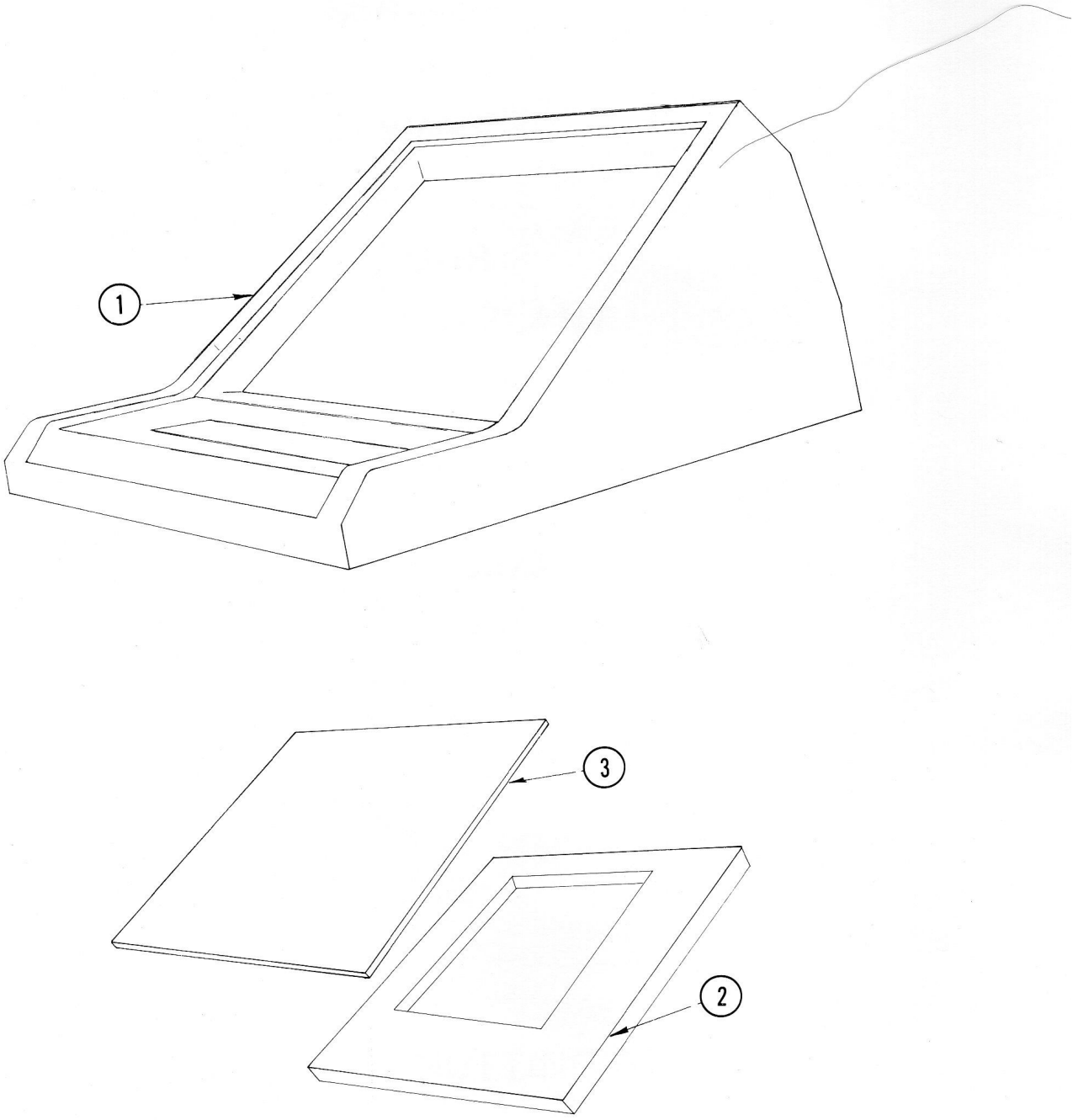

FIGURE 5

SERVICE

IS

ALWAYS

AVAILABLE

AT OUR

CALIFORNIA PLANT

(415) 961-9373

NUTTING ASSOCIATES, INC.
500 LOGUE AVENUE
MOUNTAIN VIEW, CA. 94043